Access Management Software (AMS)

System guide

Please use the diagram below to build an AMS compatible system.
Products are sorted by component, then by image and corresponding part number.

Bosch access system overview

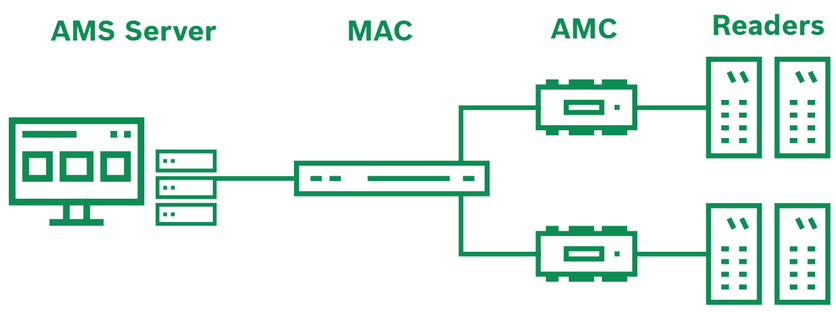

Software licenses

Base licenses

AMS-BLIT
Base license AMS Lite

AMS-BPLU
Base license AMS Plus

AMS-BPRO
Base license AMS Professional

Access controllers and extension boards

Access Modular Controllers (AMC)

APC-AMC2-4R4CF
Door controller
RS-485, 8 readers

APC-AMC2-2WCF
Door controller
Wiegand, 2 readers

APC-AMC2-4WCF
Door controller
Wiegand, 4-8 readers

I/O Extension boards for AMC

API-AMC2-4WE
Wiegand extension
board for 4 readers

API-AMC2-16IOE
I/O extension board
with 16-input & 16-output

API-AMC2-16IOE
I/O extension board
with 16-input & 16-output

API-AMC2-8IOE
I/O extension board
with 8-input & 8-output

Accessories

Enclosures

AEC-AMC2-UL01 / AEC-AMC2-UL02
Enclosure with 1 or 2 DIN rails

AEC-AMC2-ENC3/ENC3Z
Enclosure with power supply & DIN rail

Rack mounting

AEC-PANEL19-UPS / AEC-PANEL19-4DR
Mounting plate for 2 or 4 DIN rails

Power supply

APS-PSU-60
Power supply unit

Readers

Proximity readers 125 kHz

ARD-AYK12
EM, mini mullion

D8225 Mini Mullion Reader
HIDprox, mini mullion

D8224 Mullion Reader
HIDprox, mullion

D8224-SP Switch Plate
HIDprox, Wall Mount

D8223 Prox Pro Reader
HIDprox, Wall Mount

D8223-P Prox Pro PIN Reader
HIDprox, Wall Mount

Biometric readers

ARD-FPBEW2-H3
Fingerprint-card reader,
OSDP, multiCLASS

293722319
Contactless 3D finger-
print-card reader, MDPI

293744604
Facial recognition-card
reader, MDPI

293673644 /
293678678 /
293678660 /
Fingerprint-card reader,
touchscreen

293678615 /
293678628 /
293673665 /
293678636 /
Fingerprint-card reader

Enrollment reader

ARD-EDMCV002-USB
USB, MIFARE EV1

Smart card readers 13.56 MHz

Wiegand iCLASS

ARD-SER10-WI
*

ARD-SER40-WI
*

ARD-SERK40-W1
*

ARD-SER90-WI
Long range reader, *

*MIFARE classic / MIFARE EV1 (32bit 56bit opt.)

Wiegand and RS-485

ARD-AYBS6260 / ARD-AYBS6280
Card reader MIFARE classic /
Card reader with keypad MIFARE EV1

ARD-AYBS6360 / ARD-AYBS6380
Card reader MIFARE classic /
Card reader with keypad MIFARE EV1

Multitech smart card readers

ARD-SER10-RO /
ARD-SER15-RO
**

ARD-SER40-RO
**

ARD-SER40-RO
**

** OSDP, iCLASS, iCLASS SE,
iCLASS Seos, MIFARE classic
& DESFire EV1 32bit

ARD-SELECT-BOK /
ARD-SELECT-WOK
***

ARD-SELECT-BO /
ARD-SELECT-WO
***

*** OSDP (black) / (white), LEGIC, MIFARE classic,
MIFARE DESFire EV1 & EV2

Credentials

ACD-EV1-ISO / ACD-MFC-ISO
Card MIFARE EV1 with
imprinted card number / Card
MIFARE classic with imprinted
card number

ACT-EV1TRF-SA1 /
ACT-MFCTRF-SA1
Keyfob MIFARE EV1 with
imprinted number /
Keyfob MIFARE classic with
imprinted number

ACA-IC2K26 / D8236TG-10
Adhesive tag iCLASS 37bit /
Adhesive tag HIDprox 26bit

D8237-50 / ACD-ATR11ISO
Card HIDprox 37bit / Card
EM 26bit

ACD-IC2K26 / ACD-IC2K37
Card iCLASS 26bit / Card
iCLASS with printed Bosch
logo 37bit

ACT-IC2K26 /
D8236KF-10
Keyfob iCLASS 26bit /
Keyfob HIDprox 26bit

D8236-10 / ACD-ATR14CS
Clamshell card HIDprox 26bit /
Clamshell card EM 26bit

ACA-ATR13
RFID tag EM 26bit

Accessories

DS160 (white) /
DS161 (black)
High performance
Request-to-exit
detector

DS150 (white) /
DS151 (black)
Request-to-exit
detector

ISC-PB1-100
Panic button, dry contact

D8229 Keypad Only
Indoor/Outdoor
Wall Mount

Contact us: **1-800-289-0096** or visit: **www.boschsecurity.com/access**

Invented for life

BOSCH